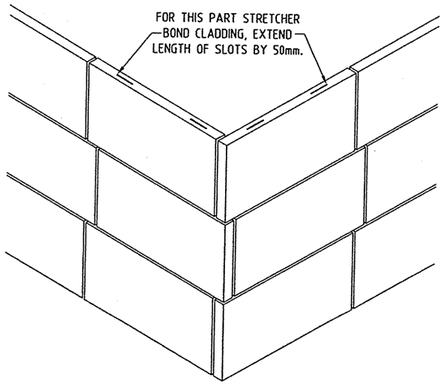

CORNER ISOMETRIC VIEW - USING PART STRETCHER BOND ALTERNATIVE
SCALE 1:10

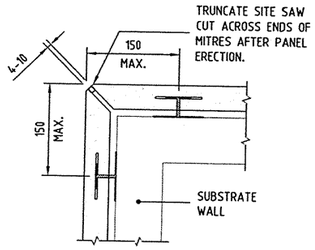

CORNER PLAN VIEW - MITRED JOINT
SCALE 1:10

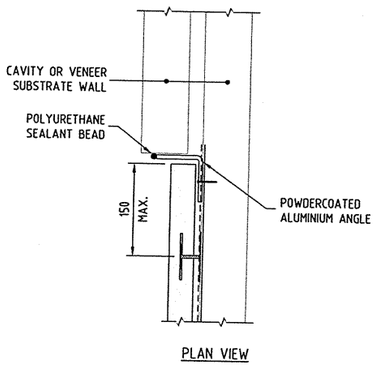

ABUTMENT CLADDING DETAIL
SCALE 1:5

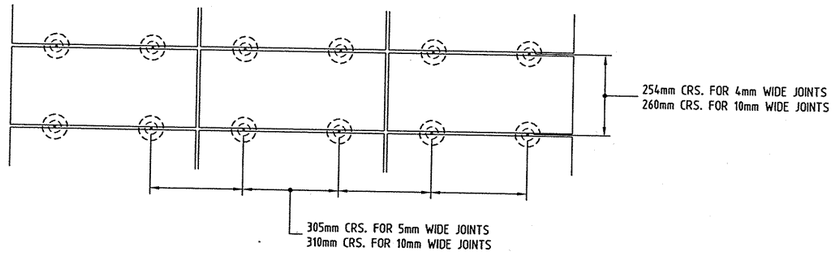

TYPICAL STACK BONDED PANELS - ELEVATION
SCALE 1:10

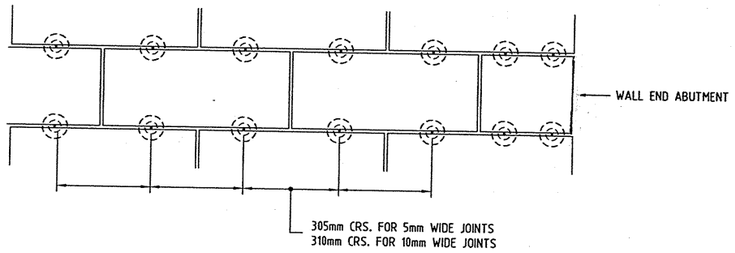

TYPICAL FULL STRETCHER BONDED PANELS - ELEVATION
SCALE 1:10

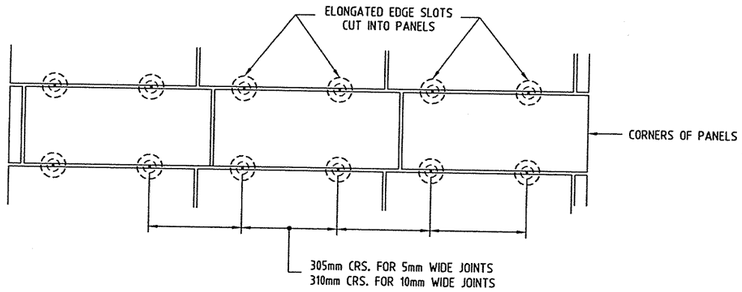

TYPICAL PART STRETCHER BONDED PANELS - ELEVATION
SCALE 1:10

COPYRIGHT - ALL RIGHTS RESERVED
Copying or reproducing the whole or part of this document in any form without the written permission of QANTEC McWILLIAM Consulting Engineers constitutes an infringement of copyright.

DISCLAIMER
QANTEC McWILLIAM Consulting Engineers accepts no responsibility for the accuracy or for any consequence resulting from the use or alteration of this drawing in electronic form.
Drawings in electronic form should be checked for accuracy against the equivalent hard copy issued by QANTEC McWILLIAM.

DIMENSIONS
Prior to commencing construction verify all dimensions against Architect's, other Consultant's and Sub-Contractor's drawings.

Dimensions are not to be scaled or read electronically from this drawing. Setout dimensions, unless specifically shown, are to be obtained from the Architect's or other Consultant's drawings.

NOTE:

THE STAINLESS STEEL, DUAL CIRCULAR, STONE CLADDING FIXING CLIPS, DETAILED ON THESE DRAWINGS AND IN THE REPORT, HAS BEEN REGISTERED UNDER THE TRADEMARK OF "STONECLIP". THE PRODUCT AND ITS TRADEMARK NAME, MAY NOT BE COPIED, MARKETED OR REPLICATED, WITHOUT THE EXPRESS PERMISSION IN WRITING OF STONEHOUSE CREATIONS PTY. LTD. (PATENT PENDING)

ISSUE	AMENDMENT	DATE	INITIALS

A.S. DRAWN	J.O.G. DESIGNED
J. GIBSON. PROJECT ENGINEER	DCS. DESIGN VERIFICATION
D. SHEEHAN PROJECT DIRECTOR	JULY 05 DATE (Copyright) ©

QANTEC McWILLIAM
consulting engineers
A.B.N. 79 086 342 065
41 Fortescue Street
Spring Hill Qld 4000
PO Box 99 Spring Hill Qld 4004
Telephone: (07) 3007 8181
Facsimile: (07) 3007 8182
E-Mail: brisbane@qmcw.com.au

PROJECT
STONEHOUSE CREATIONS PTY LTD.

DRAWING TITLE
BEAU GREY & BEAU BROWN SAWN SANDSTONE WALL CLADDING SYSTEM, AND FIXING ARRANGEMENTS

SCALES AS NOTED	CLIENT PROJECT No.
DRAWING No. 05B238 APPENDIX 'B'	ISSUE A

A1 SHEET